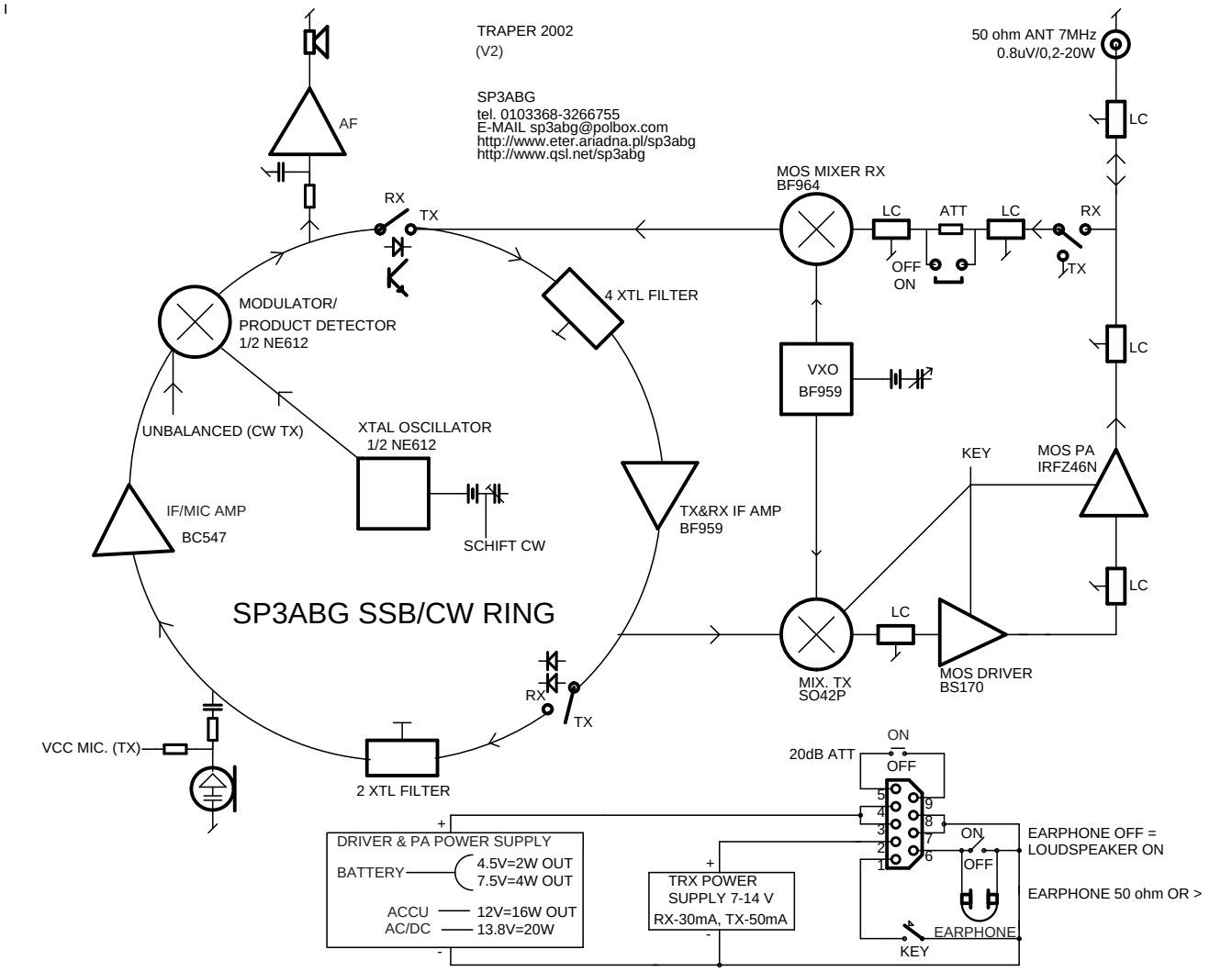
TRAPER 2002
(V2)
SP3ABG
tel. 0103368-3266755
E-MAIL sp3abg@polbox.com
http://www.eter.ariadna.pl/sp3abg
http://www.qsl.net/sp3abg
50 ohm ANT 7MHz
0.8uV/0,2-20W
AF
RX
TX
MOS MIXER RX
BF964
LC
ATT
OFF
ON
4 XTL FILTER
MODULATOR/
PRODUCT DETECTOR
1/2 NE612
VXO
BF959
UNBALANCED (CW TX)
XTAL OSCILLATOR
1/2 NE612
KEY
MOS PA
IRFZ46N
IF/MIC AMP
BC547
SCHIFT CW
TX&RX IF AMP
BF959
SP3ABG SSB/CW RING
MIX. TX
SO42P
MOS DRIVER
BS170
VCC MIC. (TX)
2 XTL FILTER
20dB ATT
DRIVER & PA POWER SUPPLY
BATTERY
4.5V=2W OUT
7.5V=4W OUT
ACCU
AC/DC
12V=16W OUT
13.8V=20W
TRX POWER
SUPPLY 7-14 V
RX-30mA, TX-50mA
EARPHONE OFF =
LOUDSPEAKER ON
EARPHONE 50 ohm OR >
EARPHONE

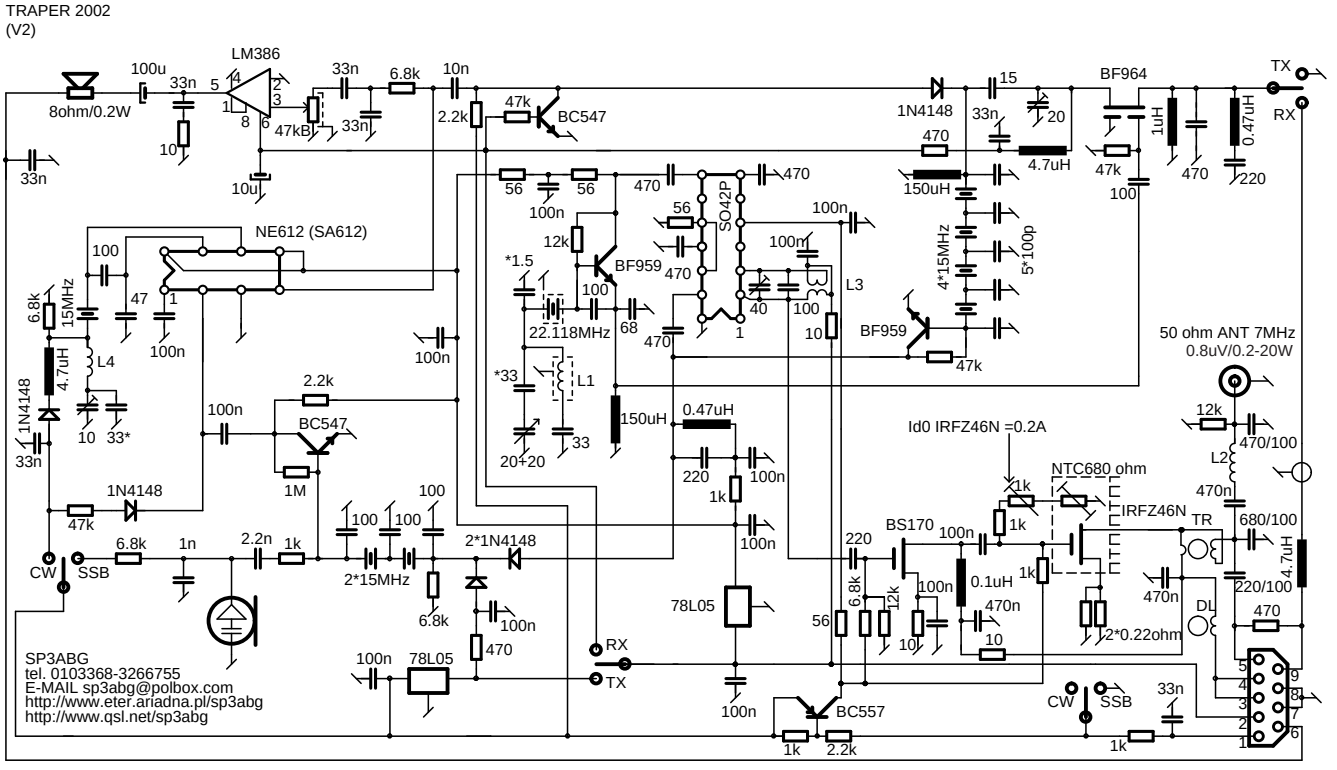
TRAPER 2002
(V2)
LM386
8ohm/0.2W
NE612 (SA612)
BC547
BF959
SO42P
BF964
1N4148
4*15MHz
5*100p
22.118MHz
L1
L3
L4
L2
TR
DL
50 ohm ANT 7MHz
0.8uV/0.2-20W
Id0 IRFZ46N =0.2A
NTC680 ohm
IRFZ46N
BS170
2*0.22ohm
78L05
BC557
CW
SSB
SP3ABG
tel. 0103368-3266755
E-MAIL sp3abg@polbox.com
http://www.eter.ariadna.pl/sp3abg
http://www.qsl.net/sp3abg